The AC-Enhancer®

Wiring Diagram

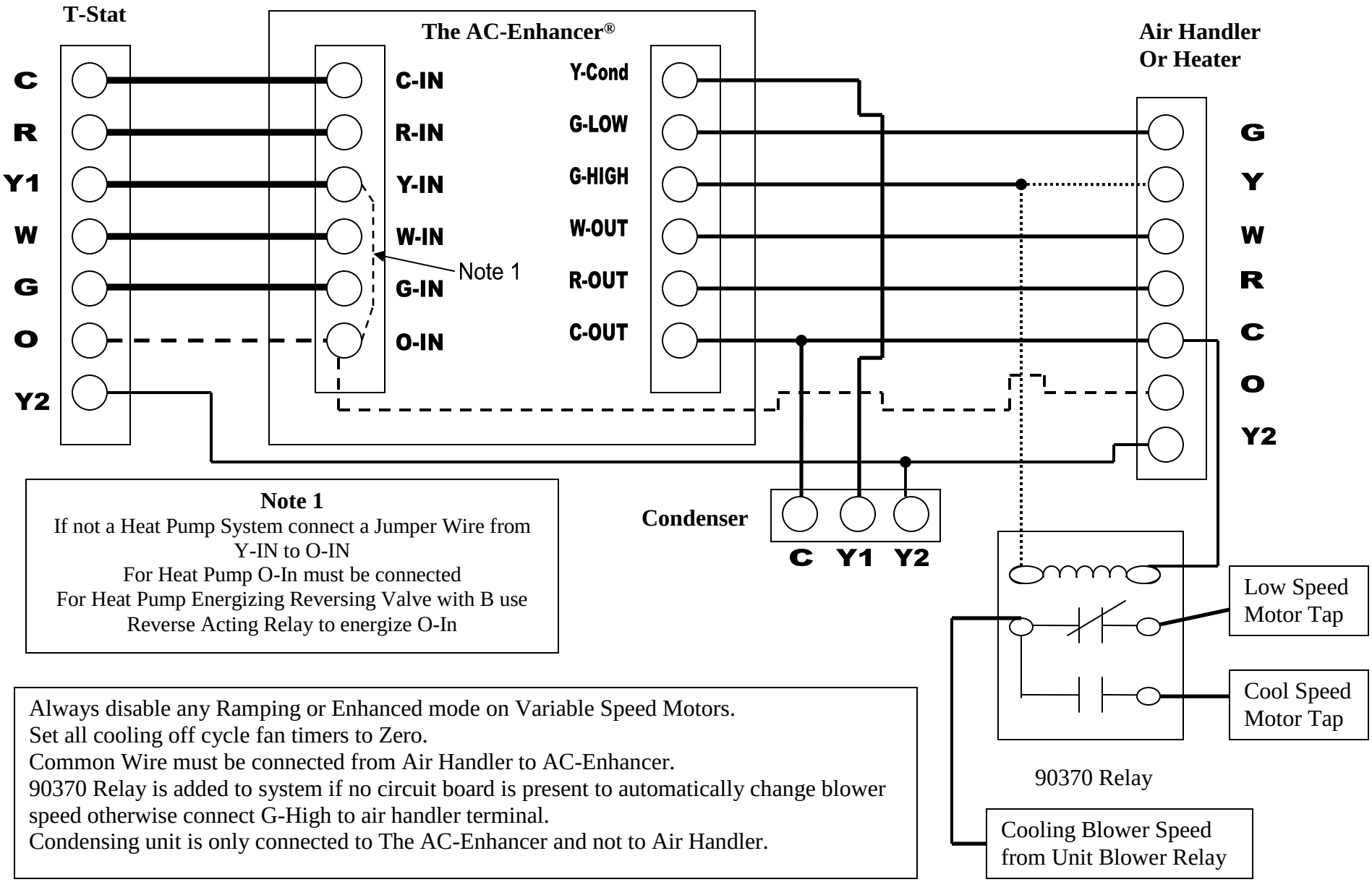

Note 1
If not a Heat Pump System connect a Jumper Wire from Y-IN to O-IN
For Heat Pump O-In must be connected
For Heat Pump Energizing Reversing Valve with B use Reverse Acting Relay to energize O-In

Always disable any Ramping or Enhanced mode on Variable Speed Motors.
Set all cooling off cycle fan timers to Zero.
Common Wire must be connected from Air Handler to AC-Enhancer.
90370 Relay is added to system if no circuit board is present to automatically change blower speed otherwise connect G-High to air handler terminal.
Condensing unit is only connected to The AC-Enhancer and not to Air Handler.