The AC-Enhancer™

Wiring Diagram

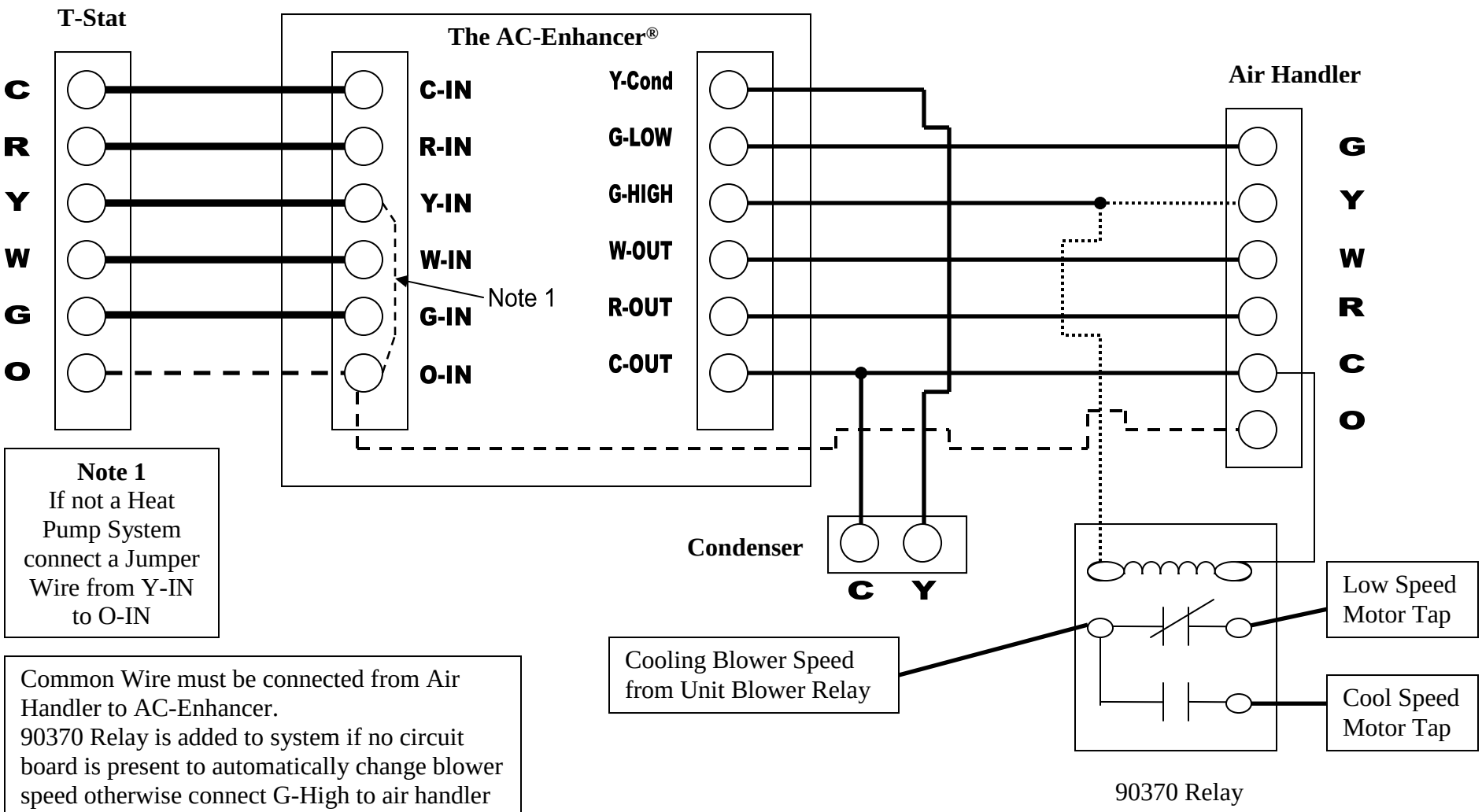

Note 1
If not a Heat Pump System connect a Jumper Wire from Y-IN to O-IN

Common Wire must be connected from Air Handler to AC-Enhancer.
90370 Relay is added to system if no circuit board is present to automatically change blower speed otherwise connect G-High to air handler terminal.
Condensing unit is only connected to The AC-Enhancer and not to Air Handler.
O-IN must be connected for Heat Pump System